QUARTER TURN ELECTRICAL ACTUATOR

AG-SERIES

- Torque 40 Nm
- Open/Close 8 s
- ISO 5211 F03/F04/F05
- IP-67 Protection Grade
- Manual Override
- Position Indicator
- Limit Position Feedback



The AG-series is a range of high quality actuators to control rotary quarter turn valves with an ISO 5211 flange of type F03, F04 and F05. The actuator can deliver 40Nm (type AG-040) in a fast an d smooth operation. The dome indicato r provides a clear visual inspection of th e valve position. The actuator features a manual override and 2 auxiliary limit switches for control purposes.

Property	Value
Enclosure Material	Power coated Aluminium
Ingress Protection Grading	IP-67 (IEC 60529)
Weight	1.15 kg
Ambient Temperature	-10 °C to 50 °C
Manual Override	Yes
PG Thread Cable Gland	PG 11
Valve Position Indicator	Mechanical (Dome)
Auxiliary Limit Switches	2
Duty Cycle	S2 30 min (IEC 60034-1)
Flange	ISO 5211 F03/F04/F05
Shaft square	14mm (9 or 11mm with insert)
Stroke	90° (Quarter turn)

Model	Open/Close	Voltage	Utility Frequency	Torque (Max.)	Current (Nom.)	Current (Max.)
AG-040-A	8 s	100-240 V AC	50/60 Hz	40 Nm	0.1 A	0.2 A
AG-040-B	8 s	24±5% V AC/DC	50/60 Hz	40 Nm	0.2 A	1.2 A
AG-040-C	8 s	12±5% AC/DC	50/60 Hz	40 Nm	0.2 A	2.2 A

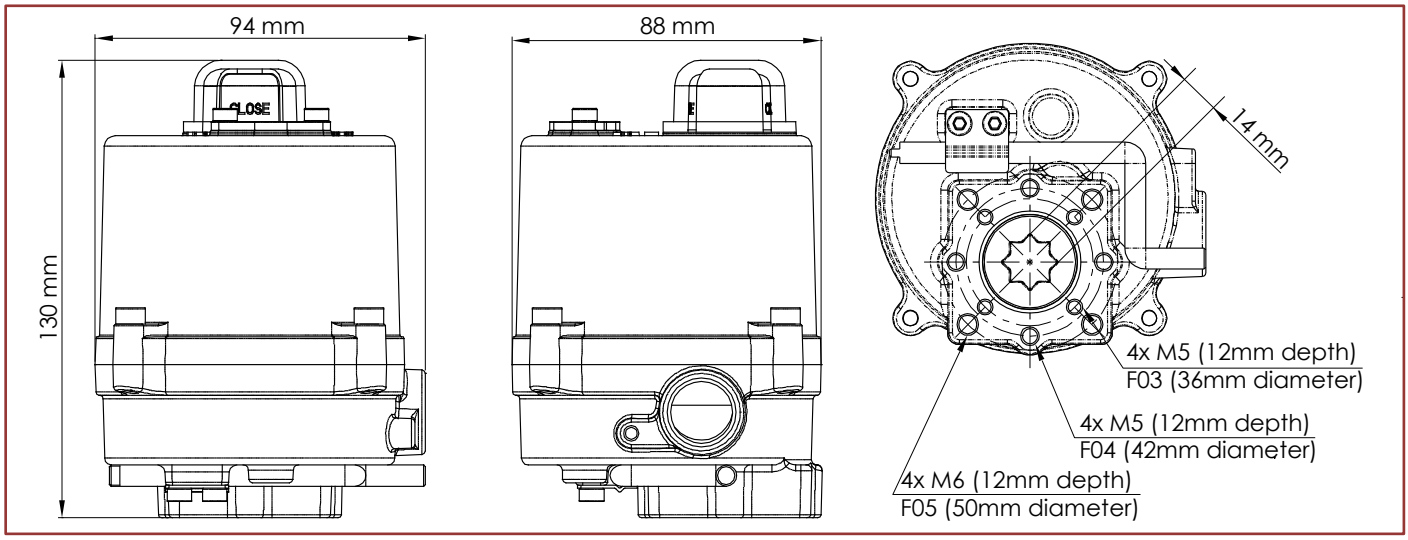

FIGURE 1: COMPONENTS OF THE AG-SERIES ACTUATOR.

Safety Instructions

General Safety Instructions

Please read the safety instructions carefully before installation, use or maintenance.

- The actuator only complies protection class IP67 (according to IEC 60529), if the device is properly connected.
- Improper use may be hazardous.
- This product is not a safety device and may not be used as such.
- Never put your hands/body parts or other objects into ports of mounted valves. The rotating motion can cause serious injuries or damages.
- Correct transport, proper storage and installation, and proper use and maintenance, are essential for reliable and error-free operation. The product may not function properly as a result of dirt, wear, damage (for example, by dropping) or improper use. Therefore, the product should not be used in applications where a malfunction can cause danger or damage.
- Check the compatibility of the valve, temperature and other operating conditions with the materials and specifications of the product. It is the responsibility of the user to select the right product for the application.
- Never exceed the limits for torque, temperature or voltage as indicated on the product and/or in the technical documentation.
- It is not allowed to change the construction of this device.
- Beware of electric shock, burnings or other injuries when working with electrical equipment.
- It is recommended to install the actuator in a dry environment. In moist environments, make sure that no moisture can penetrate the actuator. Make sure the actuator is not in contact with or in the vicinity of flammable materials. Ensure that the product is protected from frost. Frost may damage the product and/or block the moving parts, causing the electric ball valve to malfunction.
- Maintenance may only be performed when the system is not pressurized, electrically disconnected and cooled down.
- Turn off the power supply before performing any work on the actuator to prevent the risk of electrical shock and to prevent activation of the actuator.
- The product is only safe when properly installed and operated by qualified persons.
- Ensure a controlled commissioning after installation or maintenance.
- Improper installation can permanently damage the actuator or lead to dangerous situations.

Compliance

The actuators are CE marked and comply with the LVD Directive (2006/95/EC) and EMC Directive (2004/108/EC), provided that the cables and connectors are properly connected.

Intended Use

The AG-actuator can be applied to rotary type valves that require quarter turn operation, such as 2-way or 3-way ball valves and butterfly valves. Common applications include ventilation, heating systems, solar water heaters, irrigation systems and industrial equipment.

Duty Cycle

The AG-series can be used for 30 minutes (S2 30 min according to IEC 60034-1), after this period the actuator must cool down to ambient temperature. High loads and long operating times may reduce the lifespan of the actuator.

Identification

The following figure shows an example of the type plate of the actuator. Observe the specifications and the connection diagram before using the product.

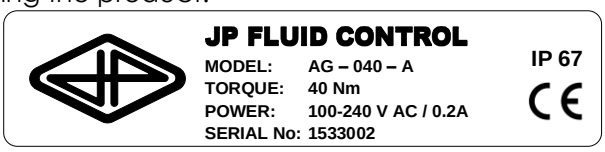

COMPONENTS

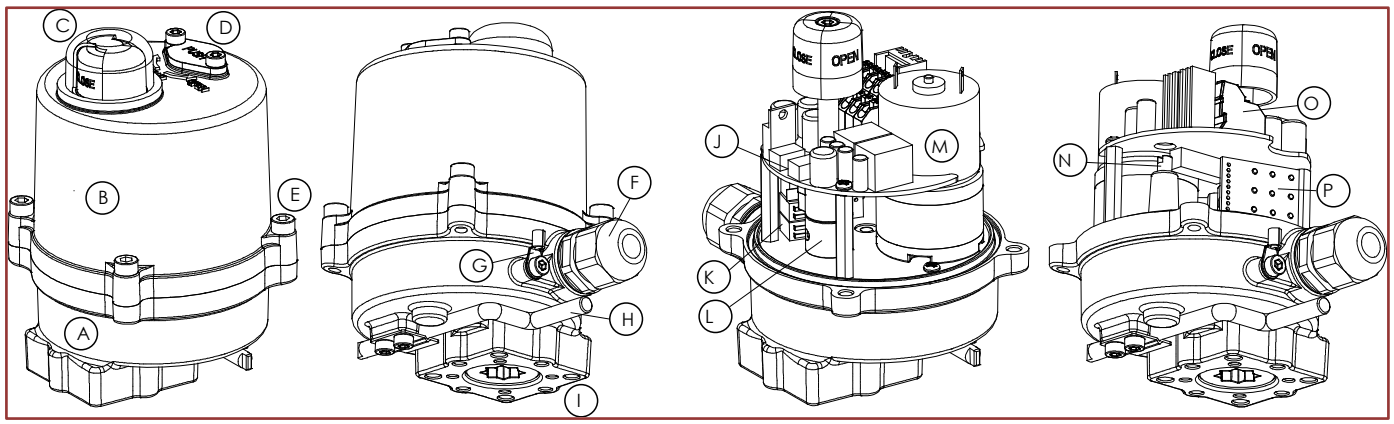

FIGURE 2: COMPONENTS OF THE AG-SERIES ACTUATOR.

Actuator Components			
A	Body Base (Aluminium)	I	ISO 5211 Flange F03/F04/F05
B	Body Cover (Aluminium)	J	Main PCB
C	Mechanical Position Indicator	K	Limit Switches
D	Manual Override Cover	L	Limit Switch Cams
E	Captive Bolts	M	Electric Motor
F	Cable Gland PG11	N	Manual Override Shaft
G	Earth Terminal M4	O	Terminal
H	Manual Override Handle	P	Limit Switch PCB

Optionally, the actuator is provided with:

- 1x set of shaft adapters (9mm and 11mm);
- 1x set of M5 bolts + spring washers,
- 1x set of M6 bolts + spring washers

Working Conditions

It is recommended to install the actuator in a dry and ventilated environment to prevent overheating and entry of moisture. Moreover, the ambient temperature should lie in the operating temperature range of -10 °C up to 50 °C. The actuator may only be used to control valves that require a maximum torque of 40Nm (AG-040-X). Please note that the operating torque strongly depends on medium type, pressure, temperatur e and period of standstill.

Step-By-Step Installation Guide

!	**Do not use sharp objects while opening the box.**
1	Carefully open and unpack the box.
2	Loosen the four Captive Bolts (Figure 2-E) and carefully remove the Body Base (Figure 2-A).

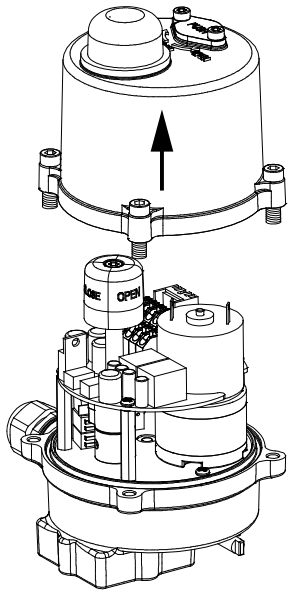

FIGURE 3: BODY COVER LIFT.

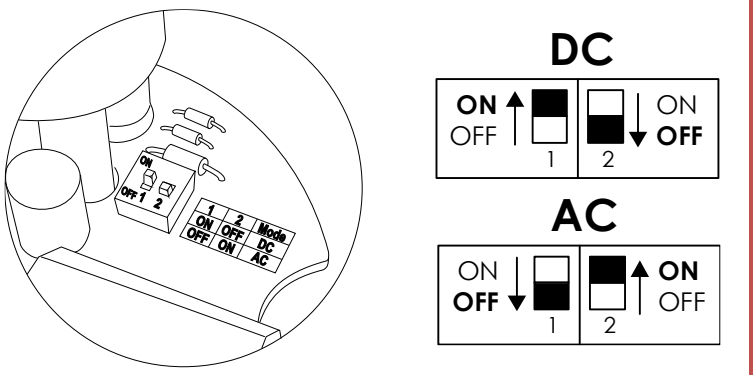

FIGURE 4: AC/DC ADJUSTMENT.

3	Unscrew and remove the Cable Gland PG11 (Figure 2-F).
4	Insert a suitable cable through the Cable Gland PG11 (Figure 2-F).
	The AG actuator has 3-point control as explained in the wiring diagram (Figure 5). Note that typAG-xxx-A hs a different wiring diagram compared to type AG-xxx-B and AG-xxx-C. Type AG-xxx-B and AG-xxx-C can be used either in AC (50/60 Hz) or in DC mode.
	Never use an AC power supply when in DC mode and never use a DC power supply when in AC mode. Make also sure you do disconnect the power supply before switching mode.
5	To activate the AC mode, put switch 1 OFF and switch 2 ON (Figure 4). To activate the DC mode, put switch on 1 ON and switch 2 OFF. The switches can be found on the Main PCB (Figure 2-J).

Electrical Wiring

	The wires should be connected to the terminal block (Figure 2-N), according to the wiring diagram (Error! Reference source not found.**).**

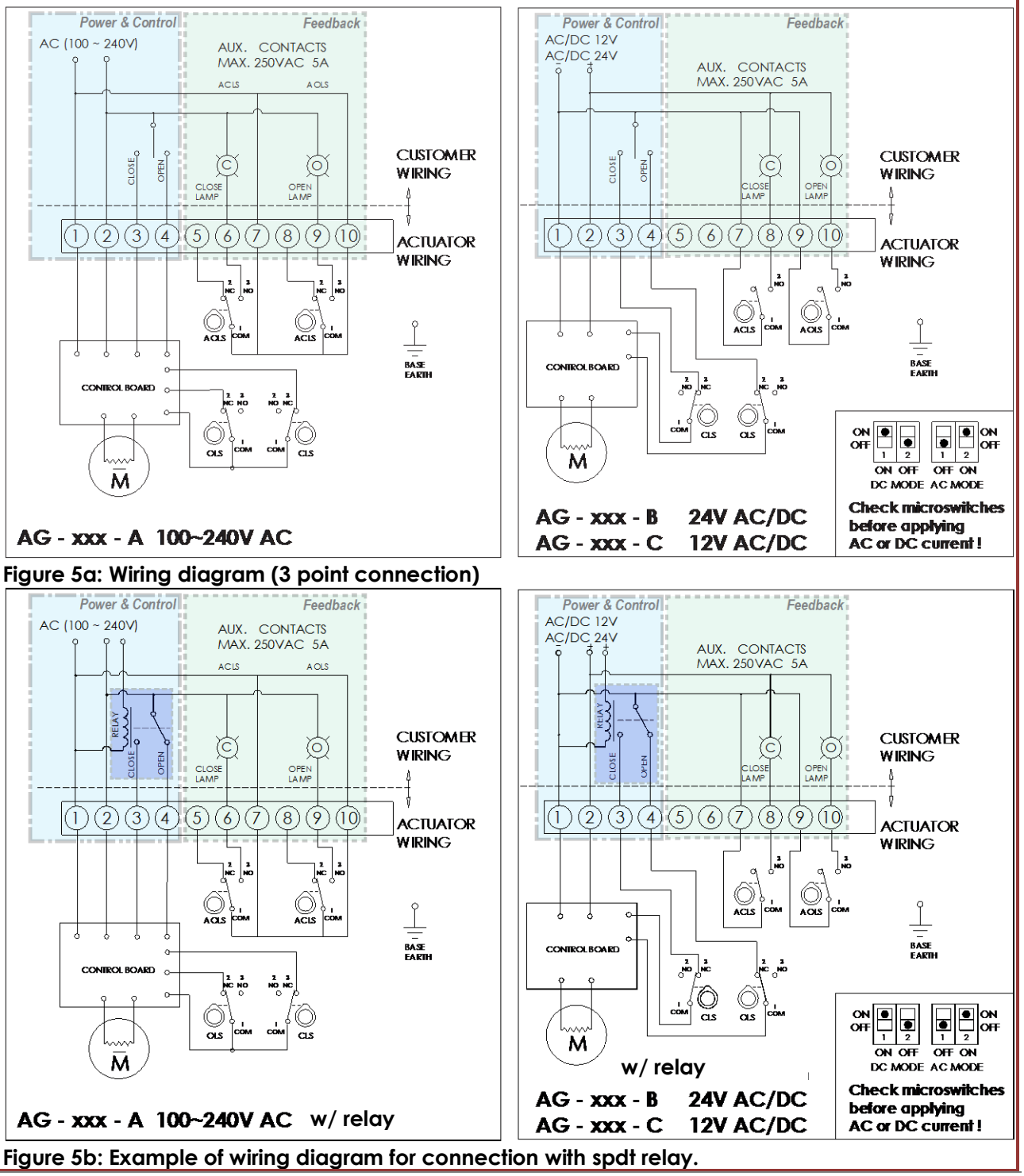

Figure 5a: Wiring diagram (3 point connection)

Figure 5b: Example of wiring diagram for connection with spdt relay.

6 **AG – XXX – A (100-240VAC):** Connect terminal 1 and 2 (Figure 5a) to the power supply, it doesn't matter which terminal is connected to the phase signal.
AG – XXX – B (24V AC/DC) or AG – XXX – C (12V AC/DC: Connect terminal 1 (Figure 5a) to the negative terminal of the power supply and terminal 2 to the positive terminal of the power supply.

Never connect terminals 3 & 4 simultaneously to the power supply. Doing so may lead to permanent damage.

Terminal 3 and Terminal 4 are used to control the actuator. That is, to close (terminal 3) and open (terminal 4) the actuator.

7	**AG – XXX – A (100-240VAC):** The actuator will close/open when terminal 3 or terminal 4 is connected to the same signal of the power supply as terminal 2. **AG – XXX – B (24V AC/DC) or AG – XXX – C (12V AC/DC):** The actuator will respectively close/open when terminal 3 or terminal 4 is connected to the same signal (phase or neutral) of the power supply as terminal 1. **w/ relay:** Figure 5b provides an example of how a spdt (or other type of) relay can be used to operate the actuator with 1 control current. Terminal 3 and 4 should be connected to the output ports of the relay. The input signal can be provided by a source of choice like a computer or battery. The external relay is not included with the actuator.
8	Tighten the cable gland (Figure 2-F).
!	**Never use the piping to ground the electrical equipment.**
💬	Always connect the ground, which is provided with a residual current device at voltages above 50 volts. A designated grounding point is available next to the cable entry point.
9	Connect the ground (Figure 2-G).

Feedback (Optional)

!	**Always apply a load (max. 5A) in the feedback circuit to prevent permanent damage. Always apply the correct polarity/phasing.**
10	The two auxiliary limit switches for the open and closed position can be used for position feedback. **AG – XXX – A (100-240VAC):** The position of the limit switches can be measured by the terminal pairs 6&7 (closed) and/or 9&10 (open). • **Limit switch closed position (pair 6&7):** Connect terminal 6 via a load to the same signal of the power supply that is connected to terminal 2 and connect terminal 7 signal to the same signal of the power supply that is connected to terminal 1. • **Limit switch open position (pair 9&10):** Connect terminal 9 via a load to the same signal of the power supply that is connected to terminal 2 and connect terminal 10 to the same signal of the power supply that is connected to terminal 1. **AG – XXX – B (24V AC/DC) or AG – XXX – C (12V AC/DC):** The position of the limit switches can be measured by the terminal pairs 7&8 (closed) and/or 9&10 (open). • **Limit switch closed position (pair 7&8):** Connect terminal 7 to the negative terminal of the power supply and connect terminal 8 via a load to the positive terminal of the power supply. • **Limit switch open position (pair 9&10):** Connect terminal 9 to the negative terminal of the power supply and connect terminal 10 via a load to the positive terminal of the power supply.

Mounting

💬	**In order for the mechanical indicator the show the correct position of the valve, the actuator and the valve have to be aligned. Hence, both should be either in the open or in the closed position.**
11	Align the position of the valve and the actuator. That is, open or close both the actuator and the valve (you may use the Mechanical Position Indicator (Figure 2-C)).

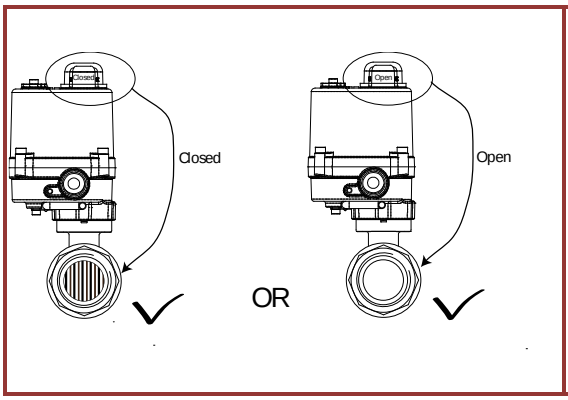

FIGURE 5: ALIGNMENT.

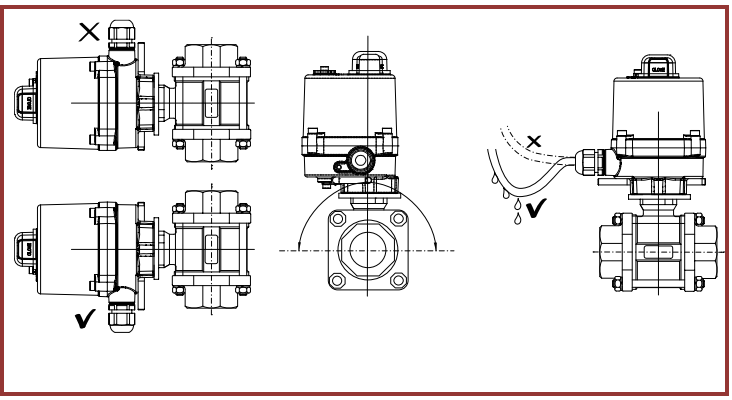

FIGURE 6: ACTUATOR POSITION.

The actuator may be installed in any position, but it is recommended to install the actuator in a vertical position, with the position indicator facing upwards. This reduces the probability of moisture entering the actuator. When the electric ball valve is mounted at an angle, it is recommended to deviate maximally 90 from the vertical position. Ensure that drops cannot slip along the cable and enter the actuator.

The actuator can be mounted to valves with a flange according to ISO 5211 type F03, F04 or F05. For valves with a shaft of 9x9mm or 11x11mm, an enclosed adapter can be used. The valve must be fixed to the actuator by four bolts of M5 (type F03), or M6 (type F04, F05).

12 Mount the actuator to the valves with the appropriate flange (Figure 2-I).

Play between actuator and valve may damage the valve or the actuator and/ or reduce its performance.

13 Remount the Body Cover (Figure 2-B) with the four Captive Bolts (Figure 2-E).

Make sure that the sealing ring is properly positioned to create a watertight connection.

Actuator Setting and Configuration

Manual Operation

Always disconnect the power supply before using the manual override.

1 Loosen the two M4 bolts a few threads with a hex key (Figure 7-1).

2 Open the Manual Override Cover Lid (Figure 7-2).

3 Carefully insert the Manual Lever (Figure 7-3) (clamped on the bottom of the housing).

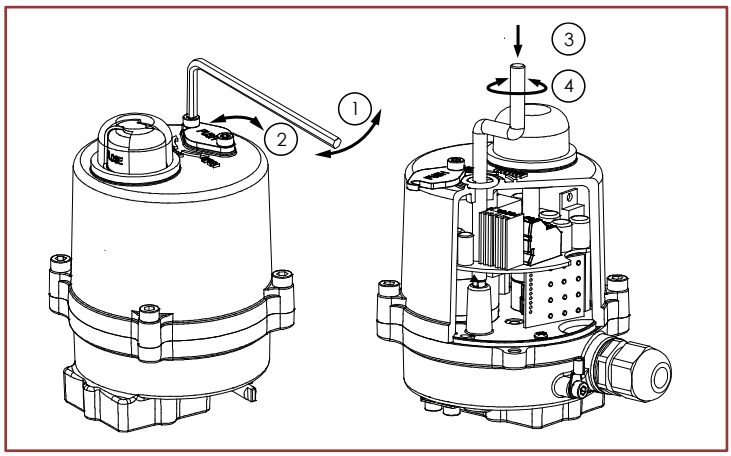

FIGURE 7: MANUAL OPERATION.

Make sure you gently push the lever downwards before you rotate it.

4	Push the lever gently 3.5mm downwards (Figure 7-3) and rotate the lever (Figure 7-4) till the actuator has reached the desired position. Never apply a too large force when for instance a valve is blocked. This could lead to permanent damage of the actuator.
5	When finished, remove the Lever and close the Cover Lid.

Limit Switch Adjustment

The limit switch cams can be adjusted to the desired angle. The standard setting is such that ball valves are fully closed or fully opened. For special applications the cam position may be altered by loosen the locking bolt (6), adjusting the cam to the right angle and locking the locking bolt again.

The angle may be altered only for a few (<10) degrees since the actuator has a limited range.

	Component
1	Close Limit Switch
2	Auxiliary Close Limit Switch
3	Auxiliary Open Limit Switch
4	Open Limit Switch
5	Close Limit Switch Cam
6	Locking M4 Bolt
7	Open Limit Switch Cam

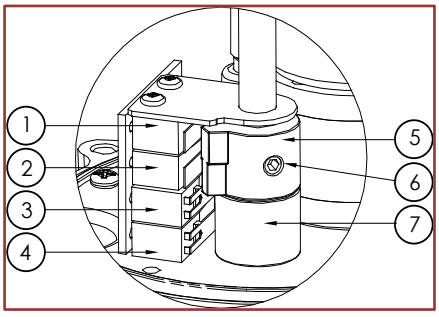

FIGURE 8: LIMIT SWITCH ADJUSTMENT.

Disposal

The removal of the product should be performed in accordance with the applicable laws. Keep in mind the media that are still present in the valve.

This manual can be downloaded from www.jpfluidcontrol.com. Modifications reserved. This document has been prepared with great care. JP Fluid Control assumes no responsibility for any errors that may appear in this document. No rights can be derived from this document.