Kraus & Naimer

Sample image

Datasheet

Article number: 70011179
Designation: KG100.T204/01.E
Description: Switch Global Disconnector

IEC 60947-3 EN 60947-3, VDE 0660 Teil 107

Tension assignée d'isolement Ui

Tension (V)	AC / DC
690	AC

Courant Ininterrompu et thermique conventionnel Iu/Ith

Intensité (A)	Température Ambiante (°)	Témpérature Maxi (°)	Spécification complémentaire
100	50	55	Température ambiante +50°C durant 24 heures avec point à +55°C

Courant assigné d'emploi Ie

Catégorie d'emploi	Tension (V)	Intensité (A)
AC-32A	20 - 400	100

Puissance assignée d'emploi

Catégorie d'emploi	Tension (V)	Nb de phases	Nb de pôles	Puissance (kW)
AC-3	220 - 240	3	3	18,50
AC-3	380 - 440	3	3	30
AC-3	660 - 690	3	3	22
AC-23A	220 - 240	3	3	22
AC-23A	380 - 440	3	3	37
AC-23A	660 - 690	3	3	30

Protection par fusible (IEC)

Caractéri	Nombre de fusible	Intensité (A)
gG	1	100

UL60947-4-1 , UL508

Nominal Voltage

Tension (V)	AC / DC
600	AC

Tension assignée d'isolement Ui

Tension (V)	AC / DC
600	AC

Rated thermal current

Intensité (A)	Température Ambiante (°)	Additional Text
100	0 - 40	--

Horsepower rating

Across-the-Line Motor Starting	Tension (V)	Nb de phases	Nb de pôles	Power (HP)	Ambient temperature [°C]
DOL	110 - 120	1	2	5	40
DOL	220 - 240	1	2	15	40
DOL	277 - 277	1	2	15	40
DOL	415 - 415	1	2	25	40
DOL	440 - 480	1	2	30	40
DOL	550 - 600	1	2	30	40
DOL	110 - 120	3	3	10	40
DOL	220 - 240	3	3	25	40
DOL	415 - 415	3	3	40	40
DOL	440 - 480	3	3	50	40
DOL	550 - 600	3	3	50	40

SCCR / Max. fuse rating

Conditions of acceptability

These devices are suitable for use on circuits capable of delivering not more than 10kA rms symmetrical amperes, 600V ac max. when protected by Type RK1 fuses or Circuit Breaker Type SFHA36AT0250, manufactured by General Electric.

Suitable for use on a circuit capable of delivering not more than 65000 rms symmetrical amperes 600V max., when protected by Class J fuses, 100A max.

Temp. rating of wire

Temperature rating (°C)	Intensité (A)	Text
75	--	--

Connecting instructions

Markings

Break all lines.

General Use

AC / DC	Tension (V)	Intensité (A)	Nb de phases	Nb de pôles	No. of contacts in series
AC	277	100	1	1	1

Kraus & Naimer

General Use

AC / DC	Tension (V)	Intensité (A)	Nb de phases	Nb de pôles	No. of contacts in series
AC	600	100	1	2	1
AC	600	100	3	3	1

General Information

Text

- The operating handle and position indicating means to be used with these manual motor controllers should be provided from the manufacturer, or the operating handle and position indicating means to be used should have been previously evaluated in combination with the manual motor controllers.
- When intended for use as a motor disconnector the device shall be provided with a method of being locked in the OFF-position.

CSA

Nominal Voltage

Tension (V)	AC / DC
600	AC

Tension assignée d'isolement Ui

Tension (V)	AC / DC
600	AC

Rated thermal current

Intensité (A)	Température Ambiante (°)	Additional Text
100	0 - 40	--

Horsepower rating

Across-the-Line Motor Starting	Tension (V)	Nb de phases	Nb de pôles	Power (HP)	Ambient temperature [°C]
DOL	110 - 120	1	2	5	40
DOL	220 - 240	1	2	15	40
DOL	277 - 277	1	2	15	40
DOL	415 - 415	1	2	25	40
DOL	440 - 480	1	2	30	40
DOL	550 - 600	1	2	30	40
DOL	110 - 120	3	3	10	40
DOL	220 - 240	3	3	25	40
DOL	415 - 415	3	3	40	40
DOL	440 - 480	3	3	50	40
DOL	550 - 600	3	3	50	40

Temp. rating of wire

Temperature rating (°C)	Intensité (A)	Text
75	--	--

General Use

AC / DC	Tension (V)	Intensité (A)	Nb de phases	Nb de pôles	No. of contacts in series
AC	277	100	1	1	1
AC	600	100	1	2	1
AC	600	100	3	3	1

GENERAL TECHNICAL INFORMATION

Size of conductor

composition of conductor	Min. / Max. value	No. of conductor per terminal	Cross section (mm²) or (AWG/kcmil)	Material of the wire
solid wire	Min.	1	2,5mm²	Copper
flexible wire	Min.	1	4mm²	Copper
flexible wire	Max.	1	35mm²	Copper
flexible wire	Max.	1	AWG 2	Copper
Single-core or stranded wire	Max.	1	AWG 1/0	Copper
Single-core or stranded wire	Max.	1	50mm²	Copper
flexible wire with sleeve	Max.	1	35mm²	Copper
flexible wire with ferrule according to DIN 46228	Min.	1	2,5mm²	Copper

Stripping length

Length (mm)	--
14	

Recommandations concernant le tournevis

Type	Value
Tournevis cruciforme	PH2
Slot screwdriver according to DIN 5264	1,2x6,5

Tightening torque of screws

tightening torque (Nm)	tightening torque (lb-in)
3	27

Approbations

Specification	Marking
EAC	EAC
CE marking	CE
UK Directives	UKCA
CSA C.22.2 No.14	
GB/T14048.3	GB/T14048.3

Kraus & Naimer

General Information	
Text	
- Ne jamais lubrifier ou traiter les contacts.	
- Les commutateurs ne peuvent être montés, branchés et mis en service que par une personne qualifiée selon les règles techniques en vigueur.	
- Use copper wire only. Do not coat the wire end with tin.	
- Les bornes qui ne sont pas supposées être utilisées pour le raccordement del'appareil sont livrées serrées et ne doivent pas être desserrées. Si toutefois ces bornes sont malgré tout ouvertes accidentellement, verifier qu'aucun shunt n'est manquant. Le câblage terminé, s'assurer que toutes les bornes sont serrées.	
Waste Electrical & Electronic Equipment (WEEE)	
Picture name	*Description*
	Do not throw in the trash as care must be taken to ensure environmentally sound disposal and recycling. Please either use an environmentally friendly waste disposal company; return to the supplier for disposal; or return direct to the manufacturer, Kraus & Naimer. You can find local Kraus & Naimer offices at www.krausnaimer.com
Proposition 65	
Picture name	*Description*
	WARNING: This product can expose you to chemicals including nickel and lead, which is known to the State of California to cause cancer. For more information go to www.P65Warnings.ca.gov.

Type de contacts: Rigid contact bridge
Revêtement des Contacts: Silver
Types de raccordement: Screw terminal

Fixation-E

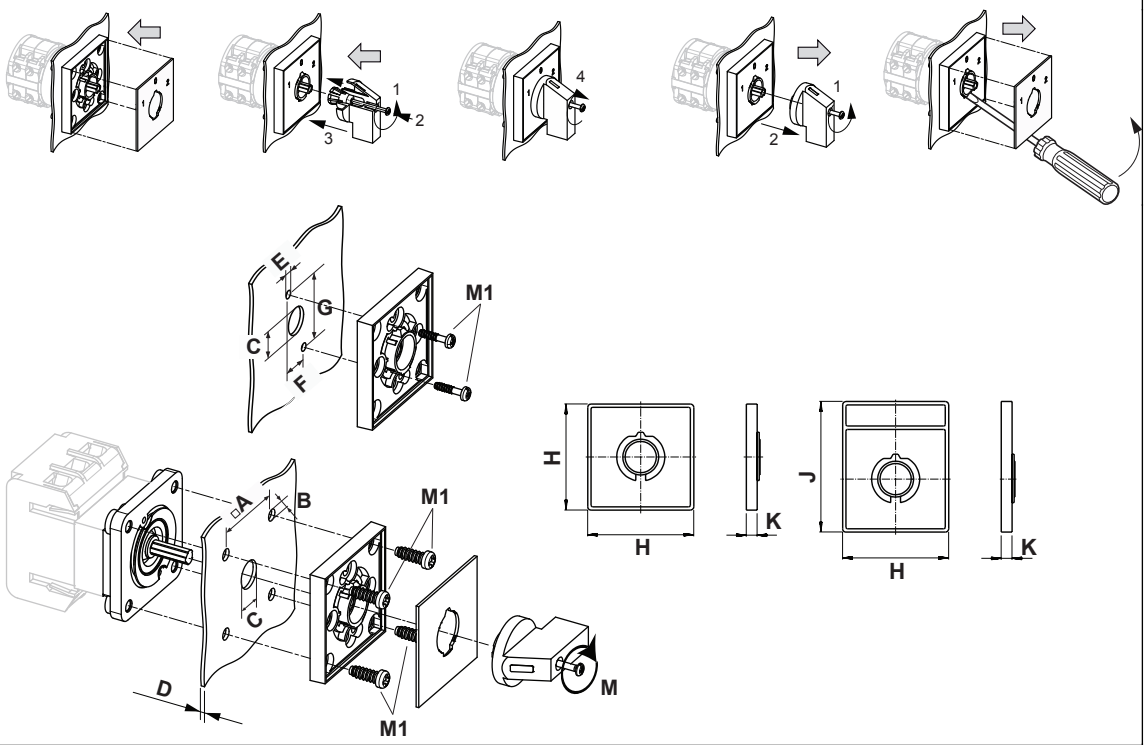

IP - Code front side		IP66, IP67
Stages		1,00 - 12,00
A	□	48,00 mm
B	Ø	5,00 mm
C	Ø	10,00 - 15,00 mm
D	⊢	<= 4,00 mm
E	Ø	4,50 mm
F	⊢	14,00 mm
G	⊢	37,00 mm
H	⊢	64,00 mm
J	⊢	78,00 mm
K	⊢	7,40 mm
M	M	0,70 Nm
M1	M	0,90 Nm

Kraus & Naimer

Wiring diagram

KG100.T304.E

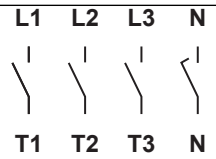

Kraus & Naimer

Switch program

KG100.T304.E

Kraus & Naimer

KG100 | **T304** | **E** | **Page 1 of 1**

Face Plate

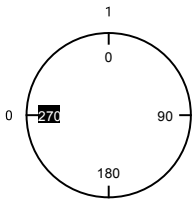

Switching Angle	90
Total switching Angle	90

		L1	L2	L3	N				
		1	3	5	7	9	11	13	15
		2	4	6	8	10	12	14	16
		T1	T2	T3	N				
0	270								
1	0	■	■	■	■				
	90								
	180								

Version: 94

Kraus & Naimer

Face plate

S1.F456/C10.V11H

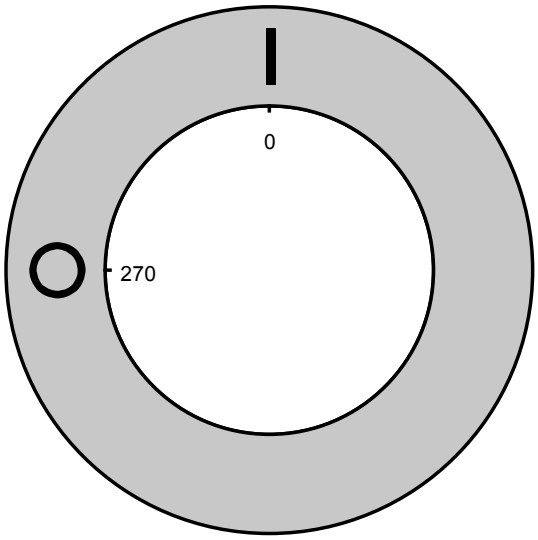

Kraus & Naimer

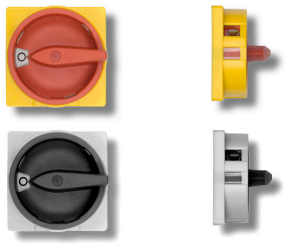

Sample image

PADLOCK DEVICE

with F-handle ring

Designation: S1.V840G/D61/A2
Colour of F-handle ring: "D" red
Colour of face ring: "6" yellow
Locking position: "1" at 270° (1x90°)
Type of mounting: "A" for type of mounting E
Type of mounting: "A" for type of mounting GK (Rose)
Switch type: "2" for KA-, KG- and KH(R)-switches

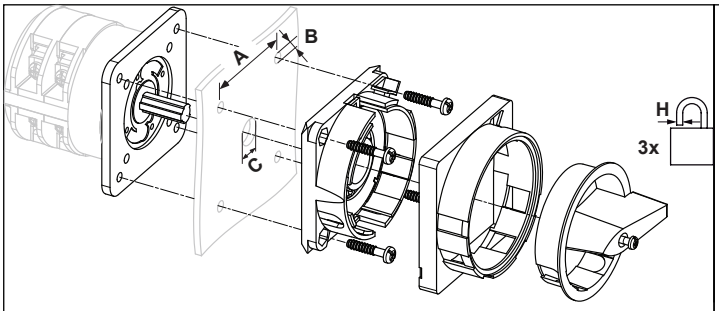

A	□	48,00 mm	B	⌀	5,00 mm	C	⌀	15,00 mm
H	⌀	7,00 - 8,00 mm						

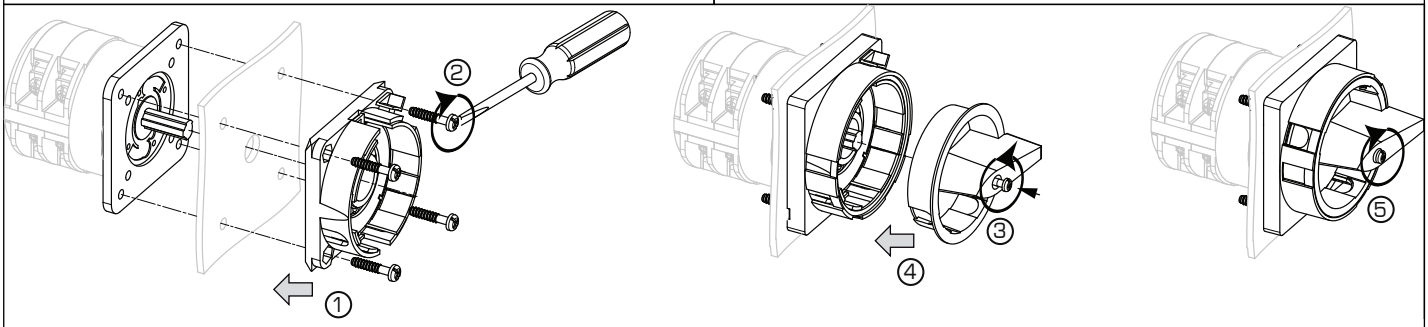

MOUNTING

1 + 2 The padlock device has to be mounted by four cylinder head screws from the front.

3 Loosen the screw and

4 Push it into the handle onto the shaft

5 Fasten the screw.

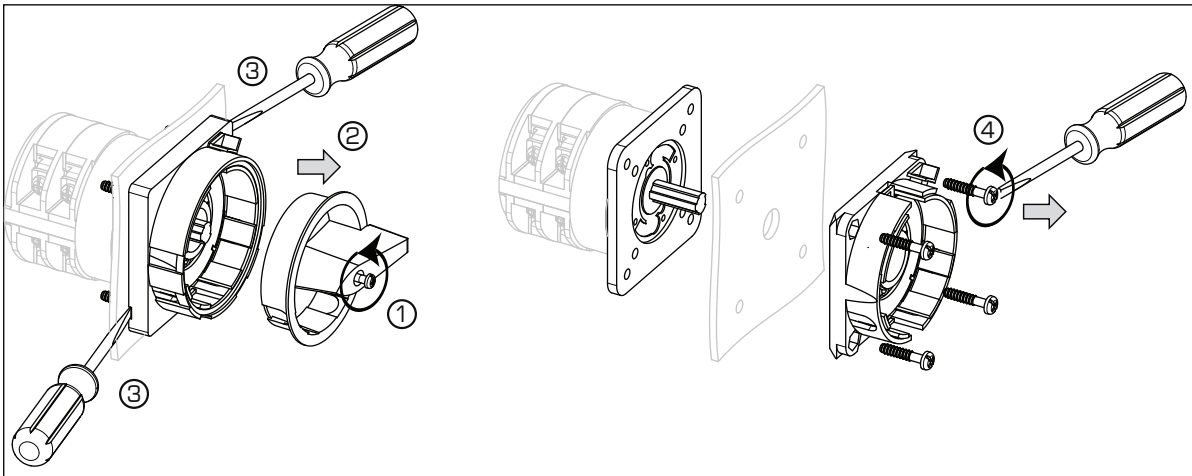

1 Loose handle screw

2 remove handle.

3 Insert a proper auxiliary tool at those points of the frame of the device which are marked by a srew driver on the drawing and remove the frame.

4 Fixing screws can be loosen now.