2/2-WAY
DIRECT OPERATED
NORMALLY CLOSED

Coaxial Solenoid Valve CX-series

The CX is a 2/2-way normally closed coaxial solenoid valve. The solenoid valves have an orifice of 16 to 25 mm, operate from 0 up to 64 bar and are suitable for highly viscous flows. The body is made of brass or stainless steel. The valves are available with 230V AC and 24V DC coils.

Example of product code

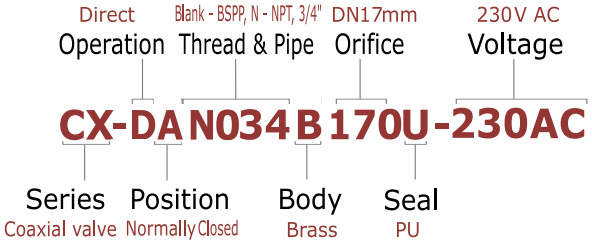

Dimensions

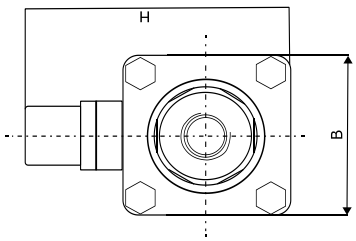

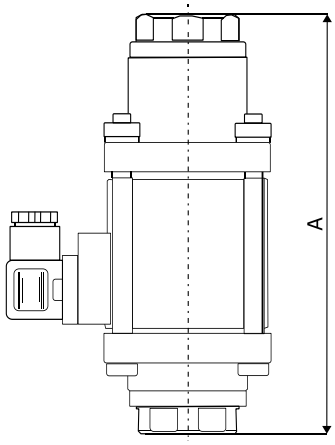

Series	Coaxial (CX)
Function	2/2 way
Operation	Direct (D)
Position	Normally closed (A)
Body	Brass (B) / Stainless steel (S)
Seal	PU (U) / FKM (F) / NBR (N) / EPDM (E)
Thread	BSPP / NPT (N)
Media Temperature	120°C
Ambient Temperature	Max 65°C
Min. Pressure Difference	0 bar
Max. Pressure	64 bar (16 bar back pressure)
Coil series	CS2
Voltage	230 V AC 50/60 Hz (230AC)
	120 V AC 50/60 Hz (120AC)
	24 V AC 50/60 Hz (024AC)
	24 V DC (024DC)
	12 V DC (012DC)
Insulation Class	Class F
Power	50 VA
Duty Cycle	100% ED
Connector	EN 175301-803 (formerly DIN 43650A)
Protection Class	IP 65 (with cable plug)
Circuit Diagram	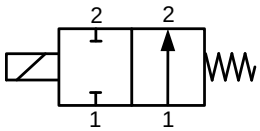

Pipe (P)	Orifice (D)	Kv (m3/h)	AxBxH (mm)	Weight (Kg)	Response time (Open/Close)
3/8" (038)	16 mm (160)	4.75	184x70x112	3.5	60/130 ms
1/2" (012)	16 mm (160)	4.75	184x70x112	3.45	60/130 ms
3/4" (034)	20 mm (200)	6.48	215x80x122	5.3	110/160 ms
1" (100)	25 mm (250)	11.23	264x90x132	7.8	160/200 ms

1. TECHNICAL SPECIFICATIONS

1.1. Principle of operation

A coaxial solenoid valve is a valve for highly viscous flows or high-pressure applications, which is electrically controlled with the aid of a solenoid. 2/2 way means that the valve has two ports (input / output) and two positions (closed / open). The valve is normally closed. This means the valve is open when energized.

In a coaxial solenoid valve, the solenoid is installed concentric to an internal laterally movable tube through which the fluid flows. This internal tube is directly connected to a magnetic plunger, which moves parallel to the direction of the flow. In a normally closed valve, when the coil is energized, the tube moves against a return spring and away from the valve seat, which allows the fluid to flow. By de-energizing the coil, the tube will be pushed back to the valve seat with the help of the return spring. This working principle is called direct operation.

1.2. Area of application

Body material

The CX-DA series is made with a brass or stainless steel body material. Depending on the application, the right material should be selected.

Body material	Allowed media
Brass (ASTM #37800)	Neutral and non-corrosive media.
Stainless Steel (SS304)	Suitable for aggressive media and corrosive media like seawater.

Diaphragm

The CX-DA series is available with Polyurethane (PUR) sealing material.

Diaphragm	Temperature	Allowed media	Not allowed
PUR	0°C - 120°C	Water, air, oils and fuels.	Glycol-based brake fluids, ammonia gas, hot water and steam, alkali, amines, acids and base, Ketones, methyl ethyl.

1.3. Flow chart

In the flow chart, the flow of water from 20°C is shown as a function of the positive pressure difference across the valve. The flow rate is expressed in liters per minute and the pressure in bar. The graph shows different pipe diameters.

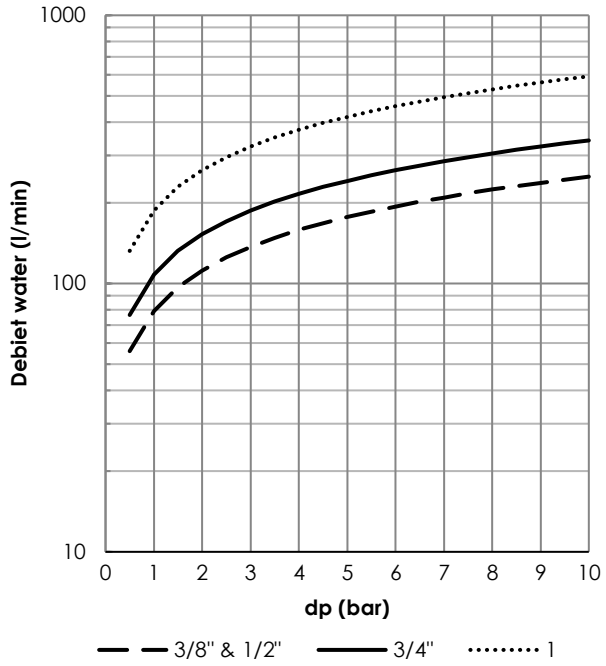

1.4. Duty cycle

The solenoid valve is suitable for continuous use. High switching frequencies and high pressures can reduce the lifespan.

1.5. Compliance

The coils are CE marked and comply with the LVD Directive (2006/95/EC) and EMC Directive (2004/108/EC), provided that the cables and connectors are properly connected.

1.6. Type label

The coil properties are displayed on a label on the coil. A second label is provided with the valve that shows all relevant valve parameters. This label must be attached to the other side of the coil. In the figure below, an example is shown.

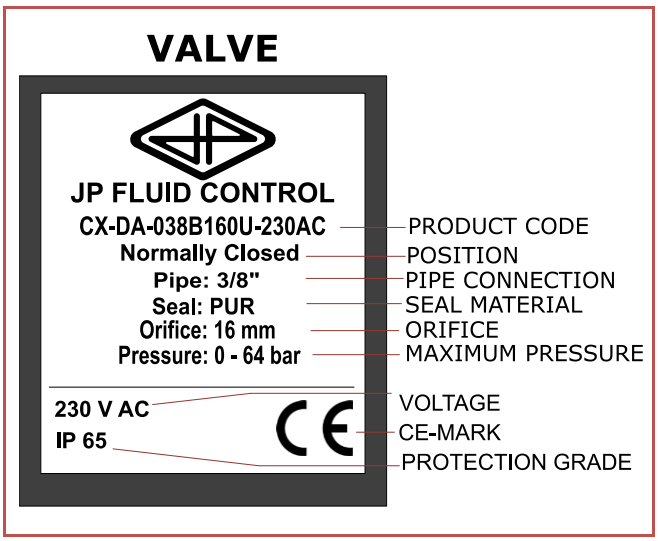

1.7. Exploded view

In the figure below is displayed an exploded drawing of the CX-DA series.

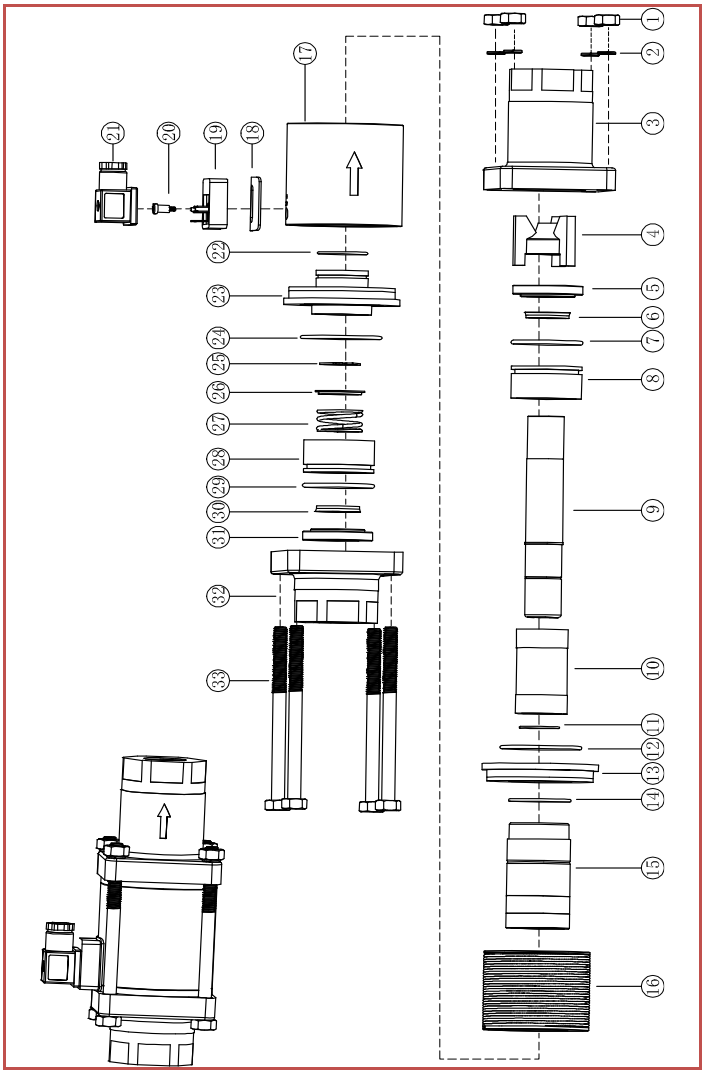

#	Part name	Material
1	Hex nuts	Stainless steel
2	Elastic gaset	Stainless steel
3	Right bonnet	Brass/SS304
4	Valve's port seal assembly	PU/NBR/EPDM/FKM
5	Guide cover	Brass /SS304
6	Shaft with pan plug seal	PTFE+SS304
7	O-ring	NBR/FKM/EPDM
8	Guide bush seat	Brass /SS304
9	Activity lever	SS304
10	Movable core	DT4
11	Magnetic separator	SS304
12	O-ring	NBR/FKM/EPDM
13	Coil magnetic plate	DT4
14	O-ring	NBR/FKM/EPDM
15	Bushing assembly	Assembly
16	Coil winding	Assembly
17	Coil cover	DT4
18	Pin seat gasket	EPDM
19	Pin holder	Assembly
20	Pin holder fixing screw	Brass
21	DIN connector	Assembly
22	O-ring	NBR/FKM/EPDM
23	Fixed core	DT4
24	O-ring	NBR/FKM/EPDM
25	Circlip for shaft	Stainless steel
26	Spring seat	Brass /SS304
27	Spring	SS304
28	Guide bushing	Brass /SS304
29	O-ring	NBR/FKM/EPDM
30	Shaft with pan plug seal	PTFE+SS304
31	Guide cover	Brass /SS304
32	Left bonnet	Brass /SS304
33	Hex bolts	Stainless steel

2. GENERAL SAFETY INSTRUCTIONS

- This product is not a safety device and may not be used as such.
- Damage caused by improper use, falling, improper operating conditions or other reasons, may cause improper functioning of the solenoid. Correct transport, proper storage and installation, and proper use and maintenance, are essential for reliable and error-free operation.
- It is the responsibility of the user to select the right product for the application.
- The product may not function properly as a result of dirt, wear, damage (for example, by dropping) or improper use. Therefore, the product should not be used in applications where a malfunction can cause danger or damage.
- This product is not intended or approved for medical applications, food and/or application in gas appliances.
- Check the compatibility of the medium used, temperature and other operating conditions with the materials and specifications of the product.
- Never exceed the limits for pressure, temperature or voltage as indicated on the product and/or in the technical documentation.
- The temperature of a solenoid valve coil can rise during operation; this is normal. Overheating will cause smoke and a burning smell. In this case, the power supply must immediately be disconnected.
- Warning: a valve opens and closes quickly. Improper use can cause pressure transients (fluid hammer) in the pipes with possible damage as a consequence.
- It is not allowed to change the construction of the valve.
- Beware of electric shock when working with electrical equipment.

3. INSTALLATION AND MAINTENANCE

1.1. Safety instructions before starting

- It is recommended to install the product in a dry environment. In moist environments, make sure that no moisture can penetrate the coil, actuator or connector. Install the solenoid valve in a safe way to avoid electric shock, burning or other injuries. Ensure that the solenoid valve is installed in an area with adequate ventilation to facilitate heat dissipation. Make sure the solenoid valve is not in contact with or in the vicinity of flammable materials. Ensure that the product is protected from frost. Frost may damage the product and/or block the moving parts, causing the product to malfunction.
- Operations may only be performed when the system is not pressurized, electrically disconnected and cooled down.
- Turn off the power supply before performing any work on the solenoid valve to prevent the risk of electrical shock and to prevent activation of the solenoid valve.
- The product is only safe when properly installed and operated by qualified persons. Please read the safety instructions and technical documentation carefully before installation, use or maintenance.
- Always make sure to start the installation safely after installation or maintenance.
- Water hammer is a typical consequence of a high flow rate and pressure in pipes with small diameters. There are several solutions to this problem:
    - Reduce the pressure with a pressure reducing valve before the solenoid valve.
    - Increase the pipe diameter if possible.
    - Dampen the water hammer by using a flexible hose or buffer before the solenoid valve.

1.2. Installation

Clean fluids and gases

It is recommended to apply a particle filter and use clean gases and fluids, but the valves are able to handle slightly contaminated or abrasive media.

Mounting the valve

Be aware of the direction of flow of the medium when installing the valve. Solenoid valves with an arrow on the housing must be connected in the indicated direction. The pipes on both sides of the valve must be securely fastened. Use a wrench for both valve and pipe while tightening to prevent unnecessary stresses in the system. The solenoid valve must be fixed via the provided connection points. Only exert force at the designated areas on the body such as the hexagon; never to the coil or armature. Avoid vibration in the pipes. Use a suitable sealant for threaded connections of the solenoid valve. Avoid the entry of thread sealing material in the valve, this can lead to malfunctioning of the valve.

The valves must be installed so that no longitudinal, twisting, compression or shearing forces are applied. When threading pipe into the valve, care should be taken to hold the port the pipe is being threaded into while tightening the pipe, so as not to twist the valve. It is also important to hold the appropriate port while adjusting the tie-screws, so as not to twist the valve. Following installation, perform leak and operating tests.

Position

The solenoid valves can be mounted in any position without affecting operation.

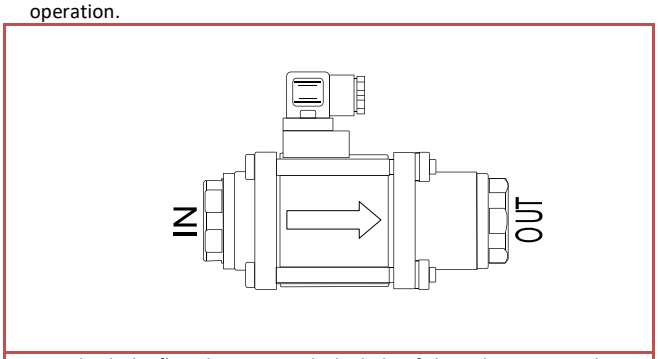

Check the flow direction with the help of the indications on the valve body.

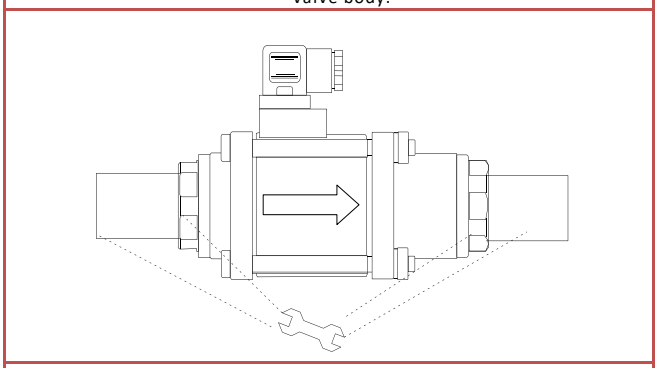

Only exert force at the designated faces, never at the coil or armature.

Installation of the cable plug

- Always connect the ground (3), which is provided with a residual current device at voltages above 50V. Never use liquid or gas piping for grounding electrical equipment. The power supply is connected to terminals (1) and (2). The polarity does not matter.
- Verify the voltage and frequency before connecting the coil.

- When mounting the connector, make sure that no moisture can ingress between the coil and connector. The connector screws should be fastened with a torque of 0.5Nm.

Connecting the power supply

- Never connect power to the coil when it is not attached to the solenoid valve! The coil may burn out.
- Only connect power if you are sure that there is no pressure in the system and no hazardous situations can occur.

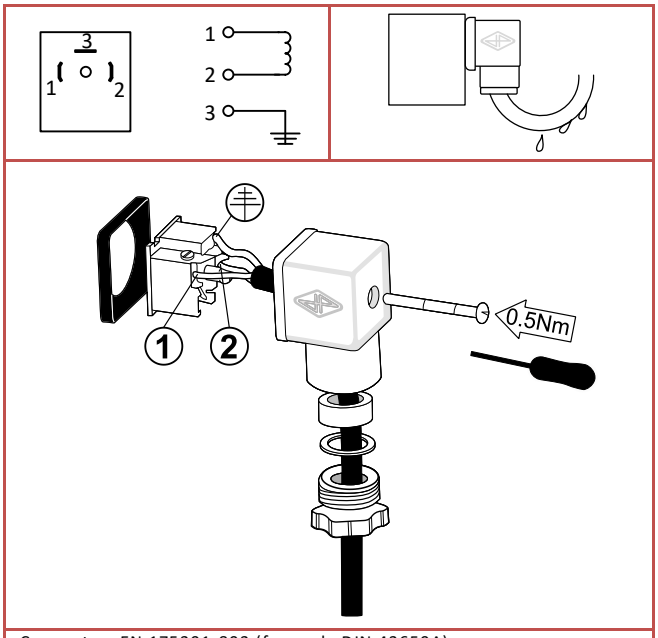

Connector: EN 175301-803 (formerly DIN 43650A).
The poles (1) and (2) should be connected to the power supply, polarity is not important. Pole (3) is the ground. Connect the connector thoroughly to avoid ingress of moisture. Ensure that drops cannot slip along the cable and enter the connector

4. SPARE PARTS

This product features no spare parts.

5. DISPOSAL

The removal of the product should be performed in accordance with the applicable laws. Keep in mind the media that are still present in the valve.