OPPLE LIGHTING.

Spot Round Adjustable HQ

- Attractive tiltable recessed spotlight with comfortable light beam
- Unique light mixing technique and optics design, UGR16
- Good beam orientation adjustment, providing great flexibility

DIM | FLICKER-FREE | UGR≤16 | IP44

Specifications

Item Code	Item Description	Equivalent to (W)	Power (W)	Lumen	Efficacy (lm/W)	CCT (K)	Degree of protection (IP)	Weight (kg/pc)
Dimmable (Triac)								
140061279	LEDSpotRA HQ2 8W-Dim-3000-40D-AL-IP44	Halogen 50W	8	640	80	3000	IP44	0.40

Accessories

542098030700
Junction-Box-WH

821017003600
LEDSmart-BLE2-Relay-250W-DIM

Packaging Information

Item			Box			
Item Code	Item Description	EU HS Code	Dimensions (mm) (LxWxH)	Gross Weight (kg)	EAN	pc/box
140061279	LEDSpotRA HQ2 8W-Dim-3000-40D-AL-IP44	94051190	107x107x96	0.48	6956321896003	1
542098030700	Junction-Box-WH	85369010	43x103.4x26	0.06	6941408868684	1
821017001200	LEDSmart-BLE-Relay-250W-DIM	94059200	90x40x30	0.08	6941408898469	1
821017003600	LEDSmart-BLE2-Relay-250W-DIM	94059200	90x40x30	0.09	6931783007594	1

Technical Specifications	
Lifetime (L70)	50,000 h
Lifetime (L80)	30,000 h
On-/Off-cycles	100,000
Colour consistency (SDCM)	4
Dimmability	Triac
Beam angle	40°
Maximum tilt angle	23°
Finishing	Brushed Aluminum RAL 9022
Colour rendering index (CRI)	≥ 80
UGR	≤ 16
Impact strength	IK02
Protection class	II
Risk group (EN 62471)	RG0
With control gear	Yes
Glow wire test	850°C
Power factor	≥ 0.9

Electrical Supply	
Frequency	50/60 Hz
Nominal voltage	220-240 V
DC input voltage	See catalogue appendix Connection Specifications
230V Cable length	0.3 m

Mechanical Properties	
Housing material	Aluminum + Polycarbonate
Optical material	Dome shape

Ambient Conditions	
Operating temperature	-10~+40°C
Application temperature	+25°C
Storage environment	-25~+50°C

5 YEARS WARRANTY

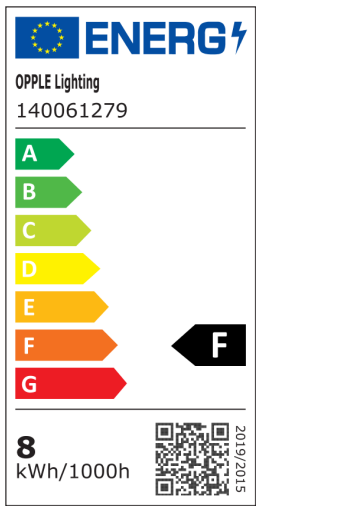

Dimensional Drawing (mm)

LEDSpotRA HQ2

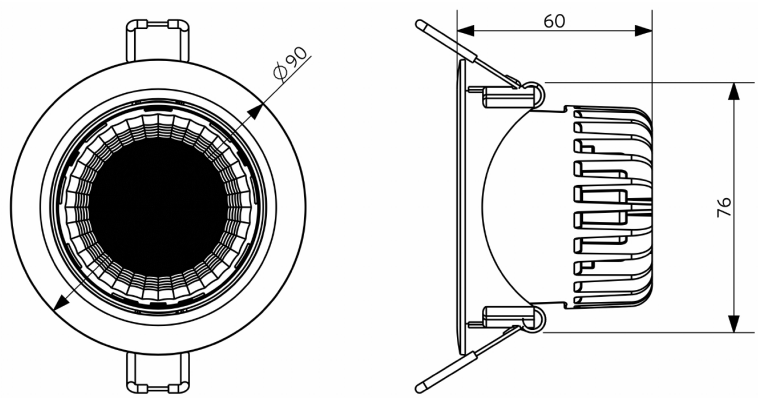

LEDSpotRA HQ2
Driver

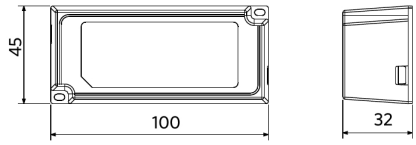

Photometric Data

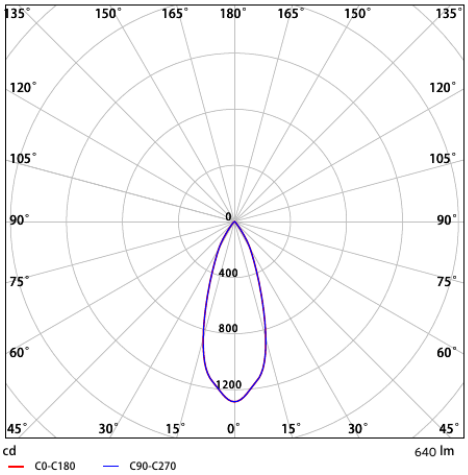

Installation Opening Drawing (mm)
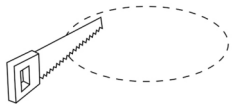
LEDSpotRA-HQ
LEDSpotRA HQ2
Ø80