OPPLE LIGHTING.

Spot Projector

FLICKER-FREE | 1.5 M | IK07 | IP66 | CRI80

- Stylish outdoor spot
- Sleek award-winning design
- Suitable for illuminating walls and signages or highlighting objects in parks and gardens
- IP66 water resistance level and IK07 impact protection
- Adjustable tilting angle of 180°
- Die casted aluminium body
- 1.5 meter cable for convenient connection
- Earth spike accessory available

Specifications

Item Code	Item Description	Equivalent to (W)	Power (W)	Lumen	Efficacy (lm/W)	CCT (K)	Beam angle	Weight (kg/pc)
On-Off								
709000027200	LEDSpotProjector-E Rd82-8W-840-36D	Halogen 50W	8	600	75	4000	36°	0.72

Accessories

709098000200
LEDProjector-Spike

543098021900
LEDFixture-IP68-Connector-Kit-3

Packaging Information

Item			Box			
Item Code	Item Description	EU HS Code	Dimensions (mm) (LxWxH)	Gross Weight (kg)	EAN	pc/box
709000027200	LEDSpotProjector-E Rd82-8W-840-36D	94054239	118x118x165	0.86	6941497753090	1
543098021900	LEDFixture-IP68-Connector-Kit-3	39174000	265x245x205	0.08	6941497708991	1
709098000200	LEDProjector-Spike	94059900	80x80x280	0.22	6941497753137	1

Technical Specifications	
Lifetime (L70)	50,000 h
Lifetime (L80)	30,000 h
On-/Off-cycles	100,000
Colour consistency (SDCM)	4
Dimmability	On-Off
Finishing	Black
Colour rendering index (CRI)	≥ 80
Degree of protection (IP)	IP66
Impact strength	IK07
Protection class	I
Risk group (EN 62471)	RG1
With control gear	Yes
Glow wire test	850°C
Displacement factor (DF)	≥ 0.9
Surge protection	2.5 kV

Electrical Supply	
Frequency	50/60 Hz
Nominal voltage	220~240 V
DC input voltage	See catalogue appendix Connection Specifications

Mechanical Properties	
Housing material	Aluminium
Optical material	Polycarbonate

Ambient Conditions	
Operating temperature	-30~+50°C
Application temperature	+25°C
Storage environment	-30~+60°C

5 YEARS WARRANTY

CE

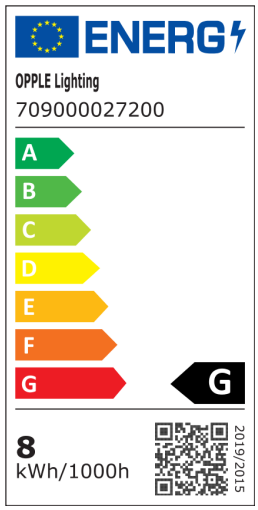

Dimensional Drawing (mm)

LEDSpotProjector-E Rd82

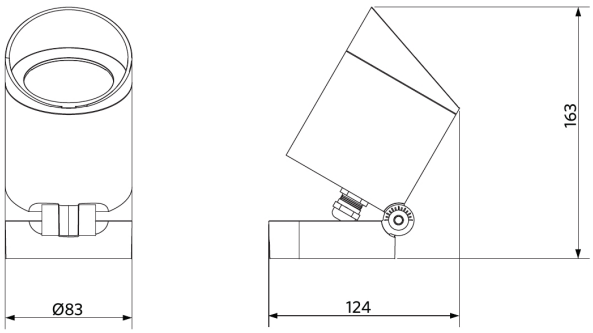

LEDSpotProjector-E Spike

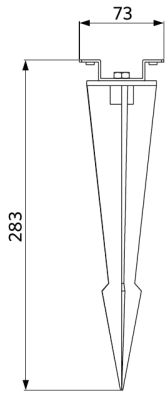

Photometric Data

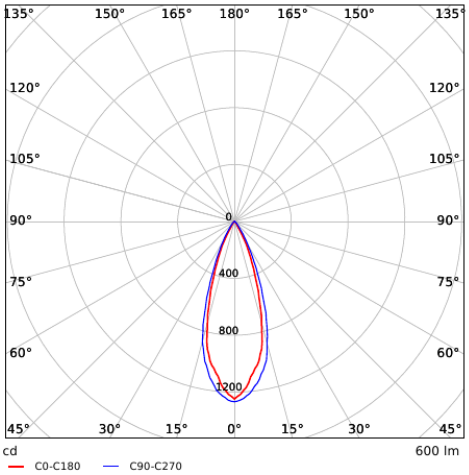

Check our website for more detailed product specifications and terms & conditions.