Hydraulic Gear Pumps, Size 1

Plessey flange, clockwise rotation, 1.2 to 5.8 cm³, up to 280 bar

Series: S-YWAG



Overview

Pump type	External gear pump, clockwise rotation
Mounting	European standard flange (Plessey flange), size 1
Displacement	1.2 to 5.8 cm³ per revolution
Flow at 1450 rpm	1.7 to 8.0 l/min
Max. continuous pressure	200 to 280 bar, depending on the displacement
Medium	Hydraulic oil with a mineral oil base

Application

These external gear pumps supply oil to hydraulic power units and circuits in industrial and mobile hydraulics. A drive motor turns the pump, and the pump delivers a constant volume of oil per revolution.

The pump mounts with a 4-hole European standard flange (Plessey flange, size 1). The drive shaft has a 1:8 taper with an M6 thread. The suction and pressure ports are pump flanges with a 30 mm hole circle.

Select the pump by the flow your circuit needs: the table gives the flow at 1450 rpm for each displacement. Larger displacements have a lower maximum continuous pressure.

Technical Data

Design	External gear pump
Direction of rotation	Clockwise (right-hand)
Body material	Aluminium
Mounting flange material	Aluminium or steel
Seal material	NBR
Mounting	4-hole flange, 52.4 × 71.9 mm, holes Ø 7.8 mm, European standard flange (Plessey flange), size 1
Centering diameter	25.4 mm
Drive shaft	Taper 1:8, M6 thread, Ø 10 mm at the shaft exit
Suction port	Pump flange, 30 mm hole circle, 4 × M6 female thread
Pressure port	Pump flange, 30 mm hole circle, 4 × M6 female thread
Port hole pattern	4 × M6 on a 30 mm hole circle (suction and pressure port)
Displacement	1.2 to 5.8 cm³ per revolution
Max. continuous pressure	200 to 280 bar, depending on the displacement
Medium	Hydraulic oil with a mineral oil base
Medium temperature	-15 °C to +80 °C
Ambient temperature	-15 °C to +60 °C

Models

* Guide value for the design of a power unit, calculated with 95 % volumetric efficiency.

SKU	Displacement	Flow at 1450 rpm*	Max. continuous pressure
H22HP	1.2 cm³	1.7 l/min	280 bar
H22HQ	1.6 cm³	2.2 l/min	280 bar
H22HR	2.1 cm³	2.9 l/min	280 bar
H22HS	2.5 cm³	3.5 l/min	280 bar
H22HT	3.3 cm³	4.6 l/min	280 bar
H22HU	4.3 cm³	5.9 l/min	250 bar
H22HV	4.8 cm³	6.6 l/min	230 bar
H22HW	5.8 cm³	8.0 l/min	200 bar

Dimensions

Dimensions in mm. 1:8 = taper of the drive shaft. Bottom left: flange view. Bottom right: drive shaft.

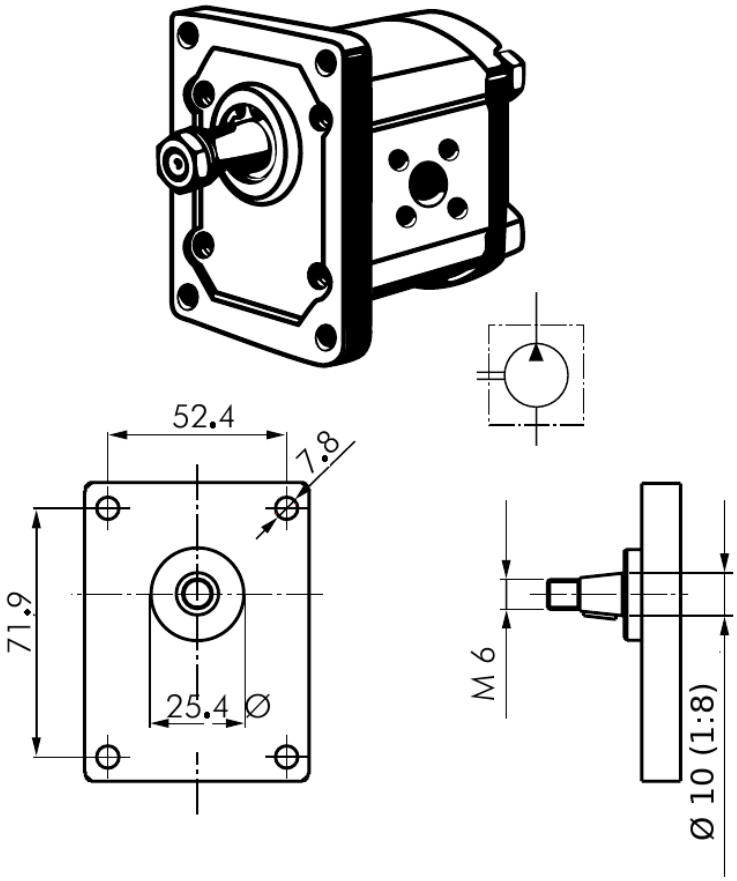

Installation

1 **Check the direction of rotation**
These pumps turn clockwise (right-hand rotation). Make sure that the drive turns the same way.

2 **Mount the pump**
Use the 4-hole Plessey flange, size 1, with the 25.4 mm centering diameter.

> ⚠ **Warning**
> Release the pressure in the system before you install or remove the pump.

3 **Connect the lines**
Use pump flanges with a 30 mm hole circle and 4 × M6 screws for the suction and pressure ports.

4 **Keep the pressure in the limits**
Do not exceed the maximum continuous pressure of the pump size (see the table).

Tameson B.V.
Torenallee 20, 5617 BC Eindhoven,
The Netherlands
CoC: 72902531
VAT: NL859280263B01

Contact Information
support@tameson.com
tameson.com

Document Information
Version: 1.0

Scan for product info

Specifications subject to change without notice. Verify current specifications before ordering.