Float Level Switch, Adjustable Rod

Switch position 120 to 500 mm, flange mounting, up to 10 bar

Series: S-VFQR — **SKU:** H22H5



Overview

Type	Float level switch, 1 level contact
Switch position	120 to 500 mm, you set it when you cut the rod
Contact	1 changeover contact
Operating pressure	Maximum 10 bar
Mounting	Flange on the tank lid, vertical position
Medium	Water, dirty water, hydraulic oil, machine oil, coolant, diesel fuel and other liquids

Function

The float acts directly on a stainless steel switching rod. It does not slide on a tube and has no magnet, so dirt and iron particles in the liquid, for example in coolant, do not affect the switch.

The switch position is set by cutting the rod to length, anywhere from 120 to 500 mm. This makes one switch suitable for many different tanks.

Do not use the switch in liquids with a strong flow.

Technical Data

Body material	Polyamide
Switching rod material	Stainless steel 1.4301
Float material	NBR
Float size	Ø 30 × 60 mm
Seal material	Neoprene (CR)
Temperature range	-20 °C to +80 °C
Maximum operating pressure	10 bar
Mounting position	Vertical
Tank mounting	Flange: hole circle 43 mm, bore 35 mm, 3 × M4
Switch position L1	120 to 500 mm
Contact	1 changeover contact
Switching capacity	250 V AC, 60 VA, maximum 1 A; 250 V DC, 60 W, maximum 1 A
Electrical connection	DIN-A connector (DIN 43650 / EN 175301-803 A, size 3, 4-pin)
Degree of protection	IP65
Medium	Water, dirty water, hydraulic oil, machine oil, coolant, diesel fuel and other liquids
Scope of delivery	Float switch without the mating connector.

Dimensions

Dimensions in mm. L1 = switch position. Left: the switch. Right: the mounting holes in the tank lid.

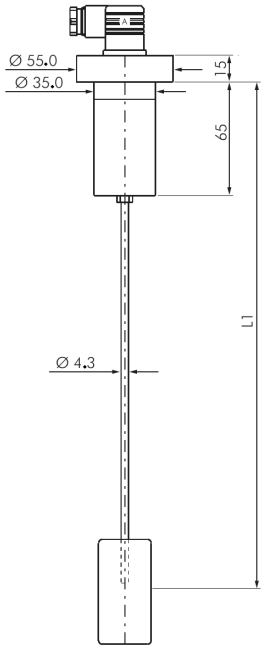

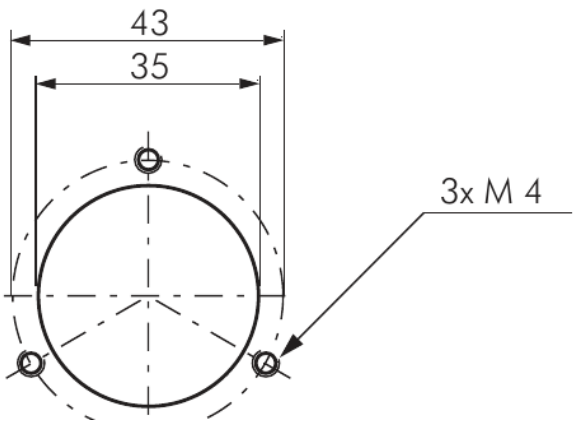

Installation

1 Set the switch position
Pull the float off the rod. Cut the rod to the length for switch position L1 (120 to 500 mm). Install the float again.

2 Prepare the tank lid
Make a bore of Ø 35 mm and 3 holes for M4 screws on a hole circle of 43 mm.

3 Install the switch
Install the switch in the vertical position.

4 Connect the cable
Use a DIN-A mating connector (not supplied). Do not exceed 250 V and 1 A.

Tameson B.V.
Torenallee 20, 5617 BC Eindhoven,
The Netherlands
CoC: 72902531
VAT: NL859280263B01

Contact Information
support@tameson.com
tameson.com

Document Information
Version: 1.0

Scan for product info

Specifications subject to change without notice. Verify current specifications before ordering.