Hydraulic Distributor Bar

2 inlets, 4 outlets, G 3/8", PN 315

Series: S-MMUY



Overview

SKU	H22EP
Type	Hydraulic distributor bar
Inlets	2 x G 3/8", female thread
Outlets	4 x G 3/8", female thread, distance 45 mm
Nominal pressure	PN 315
Material	Galvanised steel
Dimensions	195 × 40 × 40 mm
Mounting	2 mounting holes

Application

A distributor bar divides one hydraulic line into several lines. The bar has 2 inlets and 4 outlets. The outlets are on one face, with a distance of 45 mm between them.

Dimensions

Dimensions in mm.

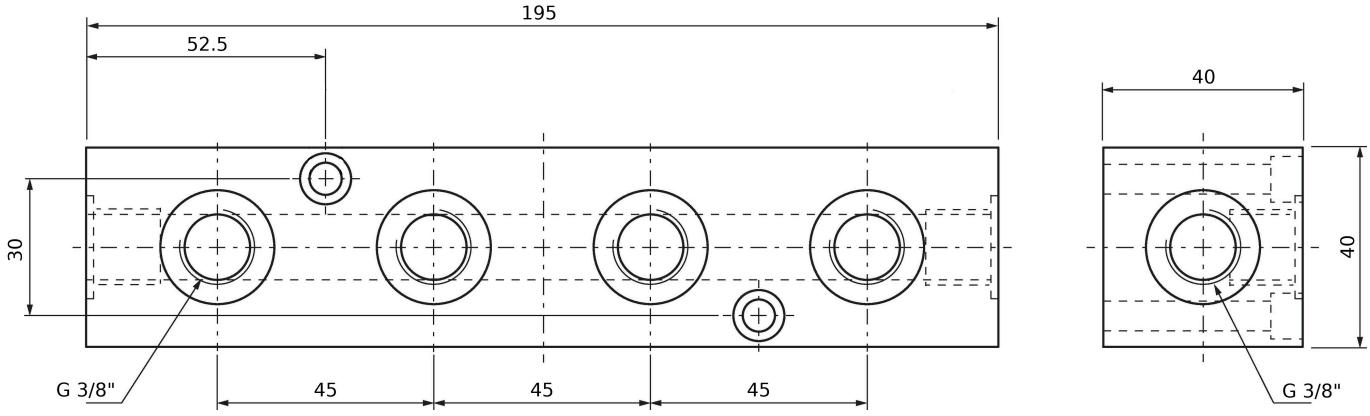

Tameson B.V.
Torenallee 20, 5617 BC Eindhoven,
The Netherlands
CoC: 72902531
VAT: NL859280263B01

Contact Information
support@tameson.com
tameson.com

Document Information
Version: 1.0

Scan for product info

Specifications subject to change without notice. Verify current specifications before ordering.