MAF300 series

AIR UNIT (FILTER)

Symbol

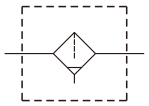

Specification

Model	MAF300	
Bore No.	8A	10A
Port size	1/4	3/8
Medium	Air	
Operating perssure range (*)	0.05~1 MPa	
Proof pressure	1.5 MPa	
Ambient temperature	– 5~+60°C (No freezing)	
Filter element	Standard: 5μm, Option: 40μm	
Drain capacity	30 cm^3	
Weight	300 g	

* Standard unit contains semi-auto-drain function when operating pressure below 0.05 MPa.

Order example

MAF300 – 8A – □ – □ – □

- MODEL
- PORT SIZE
  - **8A**: 1/4
  - **10A**: 3/8
- Blank: PC bowl
  - **N**: Nylon bowl
- FILTER ELEMENT
  - Blank: 5μm
  - **40u**: 40μm
- PORT THREAD
  - Blank: Rc thread
  - **G**: G thread
  - **NPT**: NPT thread

Flow feature

8A

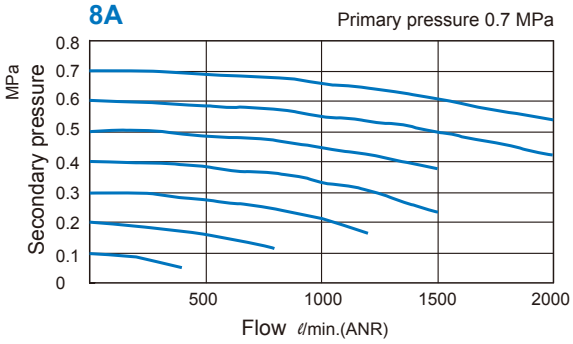
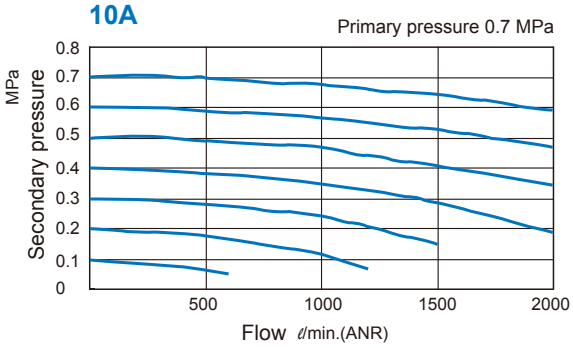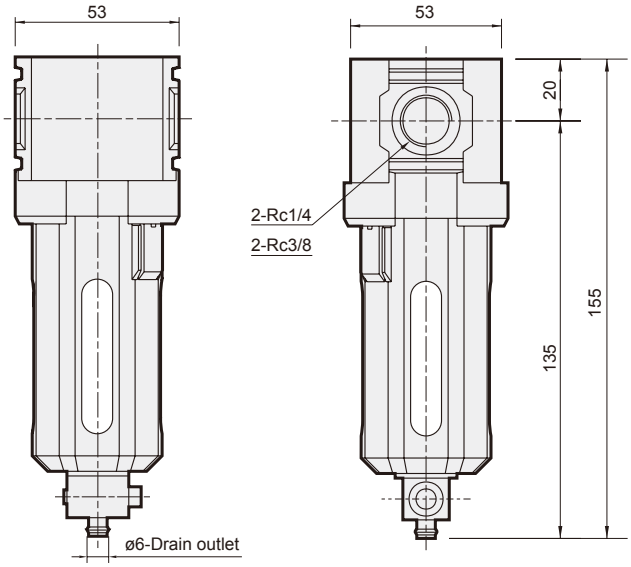
10A